Part of 595-2072

SCHEMATIC OF THE HEATHKIT® MODEL IO-4205 DUAL TRACE OSCILLOSCOPE

NOTES:

1. REFER TO THE CIRCUIT BOARD X-RAY VIEWS FOR THE PHYSICAL LOCATION OF PARTS.
2. ALL RESISTORS ARE 1/2-WATT, 5% UNLESS MARKED OTHERWISE.
3. ALL CAPACITOR VALUES LARGER THAN 1.0 ARE IN µF UNLESS OTHERWISE SPECIFIED. CAPACITOR VALUES LESS THAN 1.0 ARE IN µF.
4. THIS SYMBOL WITH A LETTER IN IT INDICATES A WIRE CONNECTION TO A CIRCUIT BOARD.
5. THIS SYMBOL INDICATES CIRCUIT BOARD GROUND (COMMON FOIL) ON A CIRCUIT BOARD.
6. THIS SYMBOL INDICATES CHASSIS GROUND.
7. THIS SYMBOL DENOTES A WAVEFORM DISPLAY AT THE INDICATED POINT.
8. THIS SYMBOL INDICATES A PART MOUNTED ON THE CHASSIS, ALTHOUGH ITS LOCATION ON THE SCHEMATIC SUGGESTS ANOTHER LOCATION.
9. CIRCUIT COMPONENT NUMBERS ARE IN THE FOLLOWING GROUPS:
   - 1 - 99 PARTS ON THE CHASSIS.
   - 101 - 199 PARTS ON THE VERTICAL AMPLIFIER CIRCUIT BOARD.
   - 201 - 299 PARTS ON THE HORIZONTAL AMPLIFIER CIRCUIT BOARD.
   - 301 - 399 PARTS ON THE POWER SUPPLY CIRCUIT BOARD.
10. THIS SYMBOL INDICATES A DC VOLTAGE MEASURED FROM THE POINT INDICATED TO GROUND WITH THE VERTICAL AMPLIFIERS BALANCED, THE TIME/CM SWITCH IN THE EXT POSITION, AND THE HORIZONTAL POSITION CONTROL CENTERED.
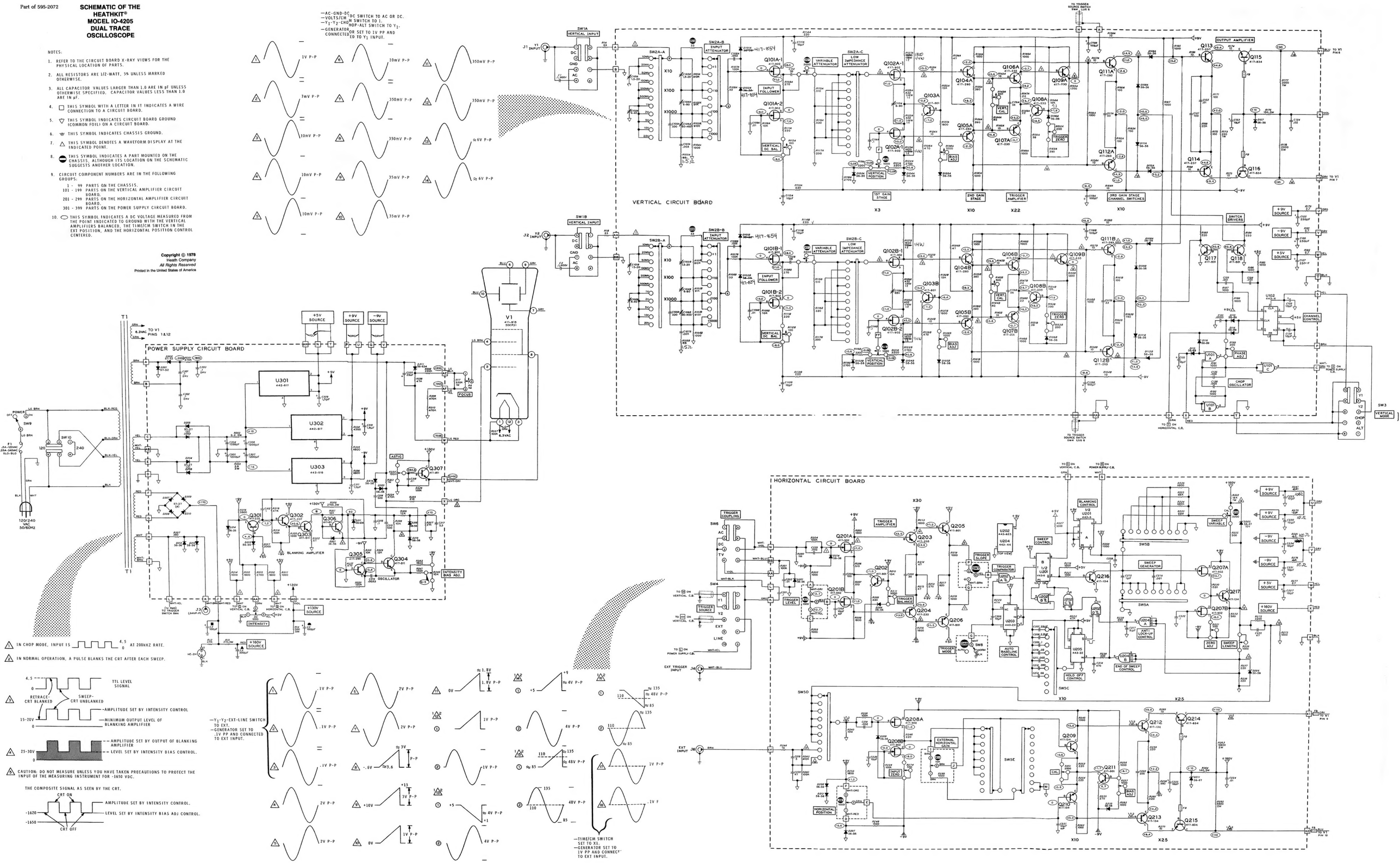
Copyright © 1978
Heath Company
All Rights Reserved
Printed in the United States of America